RESEARCH ARTICLE

A Comparative Study on DC Motor Speed Regulation Using Full-Wave Uncontrolled Rectifiers

Anggara Trisna Nugraha[1,*], **Anisa Fitri Santosa**[2] **and Rama Arya Sobhita**[1]

[1] Marine Electrical Engineering, Shipbuilding Institute of Polytechnic Surabaya, Surabaya 60111, Indonesia
[2] Bio-Industrial Mechatronics Engineering, National Chung Hsing University, Taiwan

Abstract

The speed control of direct current (DC) motors represents a critical area of study in modern electromechanical systems, offering numerous techniques for precise regulation and adaptability. These techniques encompass adjustments in the number of pole pairs, integration of external resistance regulators, modulation of armature input voltage, implementation of vector control strategies, utilization of voltage converters, and the employment of Pulse Width Modulation (PWM) in conjunction with advanced power electronics. Collectively, these methods enable refined manipulation of motor behavior, allowing for targeted performance optimization across a wide array of industrial and practical applications. By systematically altering key operational parameters, DC motors can achieve varying maximum speeds, thereby enhancing their versatility and extending their functional range. A particularly significant development in this domain is the application of simultaneous or combined control strategies, notably the cascade speed control system. This hierarchical approach permits multi-layered regulation, balancing speed precision against load demands, and thereby optimizing overall system performance. The widespread adoption of DC motors in industrial sectors stems not only from their inherently simple construction and cost-effective maintenance but also from the diverse range of available configurations, which can be tailored to meet the precise needs of specialized industries such as automation, robotics, and precision manufacturing. The capacity for fine-grained speed adjustment positions DC motors as indispensable components in contemporary mechanical systems, where they play a pivotal role in enhancing operational efficiency, energy utilization, and system stability, ultimately contributing to the advancement of industrial productivity and technological innovation.

Keywords: DC motor, motor speed, rectifiers, voltage.

1 Introduction

The industrial sector is undergoing unprecedented advancements, characterized by rapid technological innovation and a heightened emphasis on automation and system integration. Both large-scale manufacturing facilities and small-to-medium enterprises (SMEs) evolve to address increasingly

Submitted: 28 March 2025
Accepted: 31 May 2025
Published: 29 June 2025

Vol. 1, **No.** 1, 2025.
10.62762/SECO.2025.501731

***Corresponding author:**
✉ Anggara Trisna Nugraha
anggaranugraha@ppns.ac.id

Citation
Nugraha, A. T., Santosa, A. F., & Sobhita, R. A. (2025). A Comparative Study on DC Motor Speed Regulation Using Full-Wave Uncontrolled Rectifiers. *Sustainable Energy Control and Optimization*, 1(1), 43–52.

© 2025 by the Authors. Published by Institute of Central Computation and Knowledge. This is an open access article under the CC BY license (https://creativecommons.org/licenses/by/4.0/).

complex market demands, necessitating advanced machinery and control systems to maintain competitiveness. Central to this evolution is the growing reliance on electrically powered mechanical systems, where electric motors serve as indispensable components driving a wide array of applications — from high-throughput automated assembly lines to precision-controlled robotic systems and sensor-integrated platforms.

Among the various categories of electric motors, the direct current (DC) motor holds a particularly critical position due to its ability to efficiently convert electrical input into mechanical rotational motion. The rotational torque produced by the rotor is fundamental to the operation of industrial subsystems, including but not limited to conveyor systems, robotic manipulators, precision manufacturing equipment, and laboratory automation platforms [1, 2]. A defining advantage of DC motors lies in their inherent speed adaptability across a broad operational range, providing unparalleled flexibility for diverse industrial scenarios. Unlike certain alternating current (AC) motors, which often demand sophisticated and costly speed regulation frameworks, DC motors can be governed by relatively straightforward, yet highly effective, control methodologies. This operational simplicity, combined with a robust suite of control strategies, positions DC motors as a preferred choice among system engineers and industrial designers seeking solutions for dynamic and variable operational conditions.

DC motor speed regulation is conventionally achieved through three principal approaches: field current control, armature circuit resistance control, and armature terminal voltage control [3, 4]. Each method manipulates the motor's electrical properties to fine-tune performance characteristics. Field current control modulates the magnetic flux within the motor by varying the field winding current, thereby influencing speed and torque. Armature circuit resistance control introduces variable resistances into the armature circuit to adjust current flow and, subsequently, motor speed, while armature terminal voltage control directly alters the supplied voltage to affect rotational output. Through careful calibration of these parameters, system operators can enhance energy efficiency, achieve fine-grained control over performance, and maintain operational stability under fluctuating load conditions [5, 6].

Among the available speed regulation techniques, potentiometer-based speed control circuits emerge as a particularly pragmatic and cost-efficient solution, especially for small- to medium-scale applications [7, 8]. This method leverages the simplicity of a variable resistor to manually adjust motor speed, circumventing the need for complex electronic controllers or advanced programming interfaces. Although more sophisticated systems, such as microcontroller-based or digital signal processor (DSP)-based regulators, offer enhanced precision and automation capabilities, potentiometer-driven control remains widely favored for its ease of implementation, minimal technical overhead, and economic accessibility [9, 10].

The present study aims to conduct a comparative evaluation of various DC motor filtering methods, examining their respective impacts on system performance metrics, including control precision, power efficiency, and operational stability. By systematically reviewing prior design methodologies and engaging in a detailed comparative analysis, this research seeks to identify optimal filtering strategies that enhance the quality of motor control systems. The literature review will synthesize insights from recent studies, elucidating the role of key filtering components in minimizing noise, suppressing voltage fluctuations, and stabilizing motor behavior under variable operating conditions [11]. By focusing specifically on filtering techniques, the study aspires to contribute novel findings to the field of motor control engineering, ultimately supporting the development of more efficient, precise, and reliable DC motor applications within the broader context of industrial and engineering systems.

2 Related Work

The following section presents previous studies related to this research, providing an overview of existing findings and developments in the field. These prior studies serve as a foundation for understanding the current research context, identifying gaps, and highlighting the contributions of this study. By reviewing relevant literature, this research aims to build upon established knowledge and offer new insights into the subject matter.

2.1 Speed Control of DC Motors

The study by Irawan (2024) examines the speed control of DC motors using full-wave uncontrolled rectifiers, focusing on their performance and effectiveness [1]. The research highlights the importance of precise speed control in various industrial and marine

applications. The primary issue addressed in the study is the efficiency and reliability of using full-wave rectifiers for DC motor speed regulation compared to other control methods. Through experimental analysis and comparative evaluation, the study investigates voltage regulation, motor response, and overall system efficiency.

The findings indicate that while full-wave uncontrolled rectifiers offer a simple and cost-effective solution for DC motor speed control, they have limitations in achieving precise speed adjustments due to the absence of active regulation components. The study concludes that although this method is viable for applications requiring basic speed control, more advanced techniques, such as pulse-width modulation (PWM) or controlled rectifiers, may be necessary for systems demanding higher accuracy and efficiency.

2.2 Application of Single-Phase Controlled Rectifier Full-Wave

This study explores the application of a single-phase controlled full-wave rectifier as a speed regulator for brushless DC (BLDC) motors, focusing on its potential to empower rural communities [2]. The research highlights the importance of efficient and cost-effective motor control solutions, particularly in remote areas where access to advanced power electronics is limited. The primary problem addressed is the need for a reliable and affordable speed regulation method for BLDC motors, which are widely used in agricultural machinery, water pumps, and small-scale renewable energy systems. By implementing a controlled rectifier, the study aims to improve the performance and adaptability of BLDC motors for various rural applications.

The findings suggest that using a single-phase controlled full-wave rectifier enhances motor speed control efficiency compared to traditional uncontrolled rectifiers. The study concludes that this approach provides a more stable and adjustable power supply, making it a viable solution for rural electrification and sustainable development. Furthermore, the research emphasizes the potential of this technology to support local industries, increase energy efficiency, and reduce operational costs, ultimately contributing to the economic growth of rural communities.

2.3 Performance of a Three-phase Uncontrolled Full-wave Rectifier When Operating under Induction Motor

This study analyzes the performance of a three-phase uncontrolled full-wave rectifier when operating under induction motor rotational conditions [3]. The research focuses on evaluating the rectifier's efficiency, output characteristics, and impact on motor performance. The primary issue addressed is the effect of rectifier-induced voltage and current distortions on the induction motor's operation, particularly in industrial applications where stable and efficient power conversion is crucial. Through a technical investigation, the study examines key parameters such as output voltage ripple, harmonic content, and overall system efficiency.

The findings indicate that while a three-phase uncontrolled full-wave rectifier provides a simple and robust solution for powering induction motors, it introduces harmonic distortions that can affect motor efficiency and lifespan. The study concludes that although this method is suitable for basic applications, additional filtering or power conditioning techniques may be necessary to optimize motor performance and reduce electrical losses. The research highlights the need for further advancements in rectifier design to enhance power quality and improve the reliability of induction motor-driven systems.

3 Methodology

This section describes the methodology used in this study, including the materials, circuit design, and software utilized for analysis.

3.1 Direct Current Motor

When an electric current passes through a conductor, it inherently generates a surrounding magnetic field, a phenomenon governed by Ampère's Circuital Law. This foundational law of electromagnetism states that the integrated magnetic field around a closed loop is proportional to the total electric current enclosed by that loop, establishing a direct relationship between current magnitude, current orientation, and the resultant magnetic field intensity. When such a current-carrying conductor is placed within an external magnetic field, it experiences a mechanical force arising from the interaction between the magnetic field induced by the current and the externally applied magnetic field [12]. This phenomenon, known as the Lorentz force, underpins the functional principles of numerous electrical and electromechanical systems.

The Lorentz force is mathematically expressed as $F = q(E + v \times B)$, where q represents the electric charge, E the electric field, v the velocity of the charge, and B the magnetic field. In the context of current-carrying conductors, the force per unit length is often described by $F = I(L \times B)$, where I is the current, L is the length vector of the conductor, and B is the magnetic flux density. The direction of this force can be determined using the right-hand rule: if the thumb points in the direction of current flow and the fingers point along the external magnetic field, the resultant force emerges perpendicular to both, as indicated by the palm. This orthogonal relationship is fundamental to the operational dynamics of electrical machines such as motors, generators, and actuators, where mechanical work is derived from electromagnetic interactions.

In the specific context of DC motor operation, the Lorentz force serves as the central mechanism by which electrical energy is transduced into mechanical rotational motion. By precisely modulating the current through the motor's armature windings and controlling the characteristics (strength, orientation, uniformity) of the magnetic field within the stator, engineers can effectively manipulate both the magnitude and direction of the generated torque. This fine-tuned control enables sophisticated regulation of speed, torque output, and rotational direction, which is essential for adapting DC motors to a diverse range of industrial, commercial, and technological applications. Whether employed in robotic manipulators, automated production lines, electric propulsion systems, or precision household devices, the ability to harness and regulate the Lorentz force is critical for achieving high-efficiency performance, system stability, and energy optimization in contemporary engineering systems.

3.2 Shunt DC Motor

A shunt motor is a subclass of self-excited direct current (DC) motors, characterized by its configuration wherein the field winding sometimes referred to as the magnetic amplifier or excitation winding is connected in parallel (i.e., in a shunt) with the armature winding [13]. Alternatively, in certain configurations, the field winding may be directly supplied from an independent external voltage source. This parallel arrangement enables the motor to maintain a relatively stable field current, ensuring a consistent magnetic flux across a wide range of operating conditions. As a result, the DC shunt motor exhibits highly reliable and predictable speed control, even under varying mechanical load conditions, making it particularly advantageous for applications that demand steady-speed performance irrespective of load fluctuations.

The DC shunt motor's ability to sustain nearly constant rotational speed derives from the interaction between its magnetic and electrical properties. Specifically, under typical operating conditions, a shift from no-load to full-load results in only a modest speed reduction typically within the range of 5% to 15% of the no-load speed provided the system operates within its designated capacity limits. This characteristic stability arises from a combination of factors, including magnetic saturation effects in the motor core, armature reaction (i.e., the distortion of the main magnetic field due to armature-generated magnetic fields), and the mechanical positioning of the motor brushes [14]. Each of these factors interacts with the motor's intrinsic design, contributing to its overall dynamic behavior.

From a control systems perspective, the torque-speed characteristic curve of a standard DC shunt motor is notably steep, exhibiting an almost vertical profile that reflects the motor's inherent speed stability under variable torque demands. However, through the introduction of series resistors or other minor circuit adjustments, the slope of the torque-speed curve can be slightly modified, providing enhanced flexibility and adaptability in performance response [15, 16]. This tunability is critical in industrial applications where precise and responsive speed control is essential, such as in machine tools, textile machinery, and precision winding systems. By enabling the tailored adjustment of speed-torque characteristics, the DC shunt motor extends its utility across a wide array of operational contexts, offering engineers a robust and adaptable solution for optimizing system performance under diverse industrial demands.

3.3 Diode

Diodes, as fundamental active components in electronic circuits, play a pivotal role in modern electronic and electromechanical systems due to their inherent simplicity, robustness, and multifunctional characteristics. These semiconductor devices, typically constructed from materials such as silicon or germanium, function by permitting the unidirectional flow of electrical current, effectively acting as electronic one-way valves. This asymmetric conduction behavior arises from the properties of the p–n junction, where charge carrier dynamics at the junction interface facilitate current flow under forward bias while

inhibiting it under reverse bias. Owing to these characteristics, diodes serve as indispensable building blocks in numerous electrical energy conversion processes, particularly in applications where direct current (DC) is essential for reliable and efficient system operation.

Key applications of diodes include rectification, voltage regulation, signal clipping, clamping, and waveform shaping, enabling their integration into diverse circuit architectures such as full-wave rectifiers, clipper circuits, clamper circuits, and voltage multipliers [17, 18]. Among these, the full-wave rectifier is especially significant for its central role in transforming alternating current (AC) into DC, a foundational process that underpins the functionality of countless industrial, commercial, and consumer electronic systems. Unlike half-wave rectifiers, which utilize only one polarity of the AC waveform and consequently exhibit lower efficiency and higher ripple content, full-wave rectifiers exploit both the positive and negative half-cycles of the input AC signal. This dual-phase utilization markedly enhances conversion efficiency, reduces ripple voltage, and yields a smoother, more continuous DC output, which is critical for ensuring the stable performance of downstream electronic subsystems.

In practical applications, full-wave rectifiers are integral to the design of power supplies, DC motor controllers, battery charging systems, embedded electronics, and precision instrumentation. Their ability to deliver consistent, low-ripple DC power with minimal energy losses not only improves the operational efficiency of electronic systems but also enhances long-term reliability and system longevity. As a result, full-wave rectification remains a cornerstone of modern electronic design, providing the essential link between variable AC input sources and the stable DC outputs required by sensitive electronic components and control circuits. Here is a view of the diode in Figure 1.

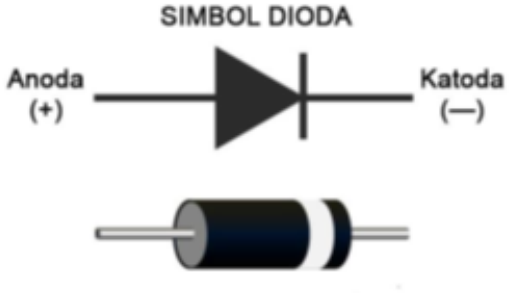

Figure 1. Diode symbol.

3.4 Full Wave Rectifier

A rectifier circuit constitutes a fundamental component within electrical and electronic systems, tasked with the essential function of converting alternating current (AC) into direct current (DC) [19]. This AC-to-DC conversion is indispensable across numerous applications, particularly in domains such as DC motor speed regulation, precision power supply systems, and electronic control circuits. The rectification process ensures the generation of a stable DC voltage, which is critical for the reliable operation of sensitive equipment, including motors and controllers, that demand consistent, non-fluctuating power input to maintain optimal performance and prevent system instability [20].

Rectifier circuits are broadly categorized into two primary types: half-wave rectifiers and full-wave rectifiers. While half-wave rectifiers utilize only one half-cycle (either positive or negative) of the AC input waveform, resulting in lower efficiency and higher ripple content, full-wave rectifiers exploit both half-cycles, significantly improving energy conversion efficiency and producing a smoother, more continuous DC output [7, 8]. For DC motor control applications, full-wave rectifiers are particularly advantageous because they enable a more effective and stable conversion of AC power, typically sourced from a transformer's secondary winding, into regulated DC power for precise motor speed control.

The standard implementation of a full-wave rectifier involves either a center-tapped transformer paired with two diodes or, more commonly in industrial and commercial applications, a bridge configuration utilizing four diodes arranged in a specific topology. This diode bridge configuration allows current to flow through the load during both halves of the AC cycle, effectively doubling the frequency of the output voltage ripple and reducing the filtering requirements compared to a half-wave setup. The result is a higher average DC output voltage, improved power factor, and enhanced overall system efficiency, making the full-wave rectifier the preferred choice for motor controllers, variable-speed drives, regulated power supplies, and other applications where power quality and stability are paramount.

3.5 Proteus

Proteus is a PCB design software that includes SPICE simulation at the schematic level, enabling users to test circuits before proceeding with PCB fabrication. This feature ensures that designs are verified for accuracy

before being manufactured. Proteus combines two essential programs: ISIS, which is used for schematic circuit design, and ARES, which facilitates PCB layout creation from the schematic [9]. Figure 2 shows the software display.

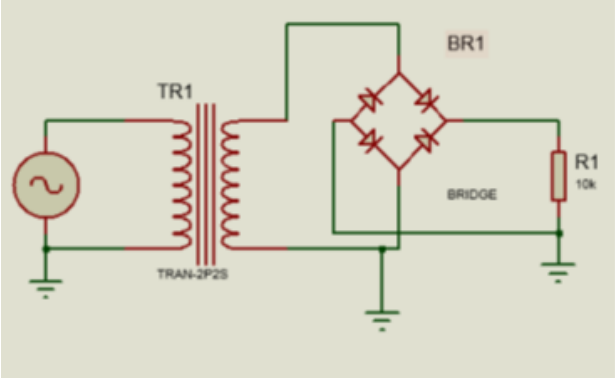

Figure 2. Full wave rectifier circuit.

This software is particularly beneficial for designing microcontroller circuits and gaining hands-on experience with electronics, from basic circuit design to advanced microcontroller applications [10]. Additionally, Proteus offers a wide range of built-in example designs, allowing users to explore and learn from pre-existing circuit configurations.

In electrical and control systems engineering, designing and simulating DC motor speed control systems using software like Proteus is crucial for validating functionality before moving to hardware implementation. Proteus, a widely used simulation tool, allows engineers to create a virtual model of the entire motor control system, providing a safe environment to test and optimize various components.

This simulation process includes essential elements such as a step-down transformer, a full-wave rectifier, a voltage filter, a DC voltage regulator, and a potentiometer-based voltage divider for fine-tuning motor speed. For electrical engineers, this approach is highly beneficial as it enables a thorough evaluation of system performance under different operating conditions without the need for immediate physical prototyping [11].

By utilizing Proteus, engineers can simulate the complete circuit, ensuring that all components function correctly and that the DC motor speed control system meets design specifications. This early-stage simulation not only facilitates debugging but also improves the overall design process by identifying potential issues before proceeding to hardware development. For example, Figure 3 shows a series of simulation experiments.

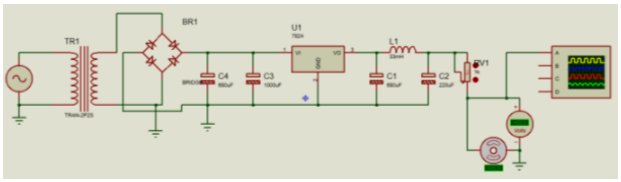

Figure 3. Single phase motor rotation control circuit with frequency parameter.

In this system, a fixed DC voltage regulator is used to maintain a stable output voltage that remains constant and cannot be directly modified. To allow for voltage adjustment, a potentiometer is integrated as a voltage divider. This setup enables precise control over the output voltage, making it adaptable to the specific requirements of the DC motor speed control system.

By incorporating a potentiometer, the design provides greater flexibility in voltage regulation, allowing users to fine-tune the motor's performance for optimal operation. This adjustability ensures that the system can meet varying operational demands while maintaining efficiency and stability.

4 Experiments

The full-wave rectifier in this design is configured to operate using a single diode, which plays a crucial role in converting the AC input into a rectified DC output. Unlike a half-wave rectifier, which only utilizes one half-cycle of the AC signal, a full-wave rectifier allows for improved efficiency by utilizing both halves of the waveform, thereby reducing power losses and providing a more consistent DC output. The rectified voltage is then directed to both the DC voltage regulator and the motor, ensuring a stable power supply for the system's operation.

The circuit for the full-wave rectifier, as shown in Figure 4, consists of several key components, including a diode, which facilitates unidirectional current flow, and capacitors, which smooth the output voltage by filtering out unwanted ripples. These capacitors store and release charge as needed, helping to maintain a steady DC voltage and preventing fluctuations that could affect the performance of connected components. Depending on the specific design, additional components such as resistors or inductors may be incorporated to further enhance voltage regulation and efficiency. This configuration ensures that the motor receives a reliable power

supply, optimizing its performance and longevity while maintaining stability in the overall system.

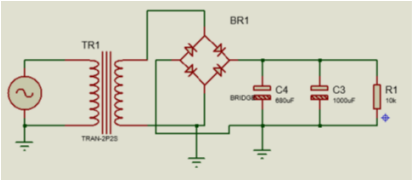

Figure 4. Full wave rectifier circuit using bridge diode.

The full-wave rectifier circuit, implemented using a bridge diode in simulation software, operates by first reducing the input voltage through a step-down transformer. This transformer lowers the voltage from 220V to 24V, ensuring compatibility with electronic components such as the DC voltage regulator, capacitors, and inductors.

This voltage reduction is crucial for maintaining safe and efficient operation within the circuit. By carefully calculating the transformer's inductance, the secondary voltage can be precisely adjusted to meet the specific requirements of the system. This fine-tuning helps optimize the performance of the DC motor and its associated components, ensuring stable and efficient operation.

$$L_p = \left(\frac{V_{in}}{V_{out}}\right)^2 \times L_s \tag{1}$$

By using the above formula, if the secondary voltage required is 24V and the primary voltage is 220V, assuming $L_s = 1$, then

$$L_p = \left(\frac{V_{in}}{V_{out}}\right)^2 \times L_s = \left(\frac{220}{24}\right)^2 \times 1 = 84.028\,\text{H}.$$

L_p is obtained at 84.028 H, then enter this value into the transformer and from the stepdown circuit and full-wave rectifier circuit using a diode as shown in Figure 5, the following waves are obtained:

The reaches a peak voltage of 311V, as observed on the oscilloscope, which measures the maximum voltage. To determine the RMS (Root Mean Square) voltage, the peak value is multiplied by 0.707, resulting in 220V.

The filter plays a crucial role in smoothing the rectified voltage by reducing fluctuations and minimizing ripple, thereby ensuring a more stable DC output. In a rectifier circuit, the conversion of AC to DC inherently introduces a pulsating voltage, which can be detrimental to sensitive electronic components

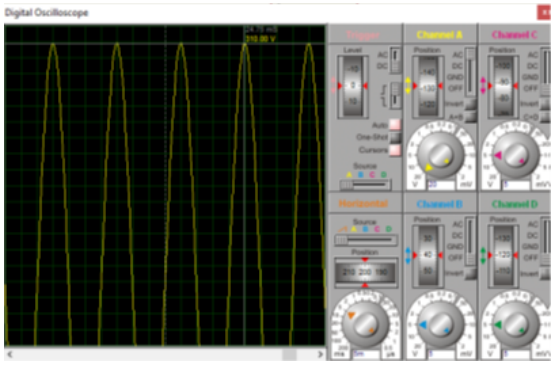

Figure 5. Sinusoidal AC waveform on the primary side of the transformer.

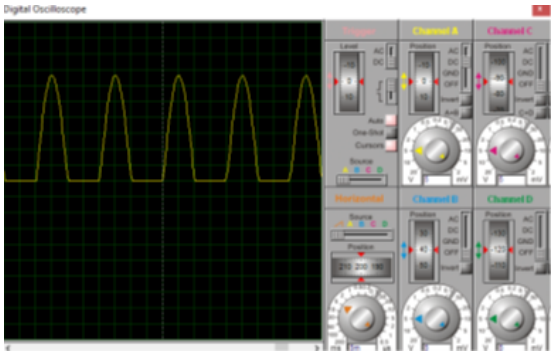

Figure 6. The waveform produced by the full-wave rectifier before filtering.

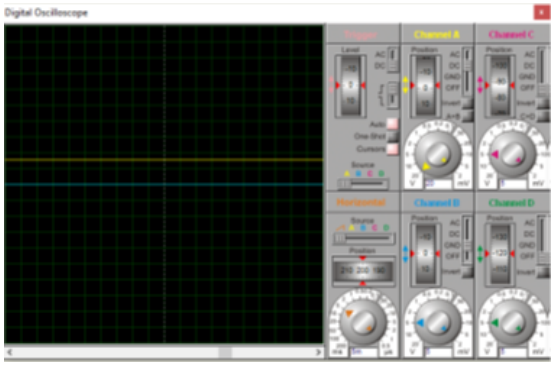

Figure 7. The waveform produced by the full-wave rectifier after filtering.

if not properly managed. The presence of ripple voltage, characterized by periodic variations in the DC output, can lead to instability in circuits, increased noise, and degraded performance of electronic devices. If excessive ripple is left unfiltered, it may cause overheating, signal distortion, or even long-term damage to components such as microcontrollers, sensors, and power transistors. By incorporating a filtering mechanism—typically using capacitors, inductors, or a combination of both—the circuit effectively smooths out these fluctuations, providing a more consistent and reliable DC voltage suitable for powering various electronic applications. This

Table 1. Comparison wave form.

Parameter	Figure 6	Figure 7
Signal Type	Periodic Wave (Oscillating)	Flat Line
Volt/Div	5	10
Amplitude (Vp)	5	0
Peak-to-peak Voltage	10	0

stabilization is essential for ensuring the longevity and efficiency of electrical and electronic systems.

The comparison between Figures 6 and 7 reveals distinct differences in signal characteristics, particularly regarding waveform shape, voltage amplitude, and signal activity. Figure 6 illustrates a periodic waveform, representative of an oscillating electrical signal, likely an alternating current (AC) or a time-varying voltage within the circuit under examination. With the oscilloscope's voltage sensitivity set to 5 volts per division (Volt/Div), the observed peak voltage (Vp) reaches 5 volts. This results in a calculated peak-to-peak voltage (Vpp) of 10 volts, which quantifies the total voltage excursion between the waveform's maximum positive and maximum negative points. The presence of this cyclic pattern indicates an active and dynamically varying signal, characteristic of systems involving alternating supply or modulated waveforms, where energy transfer and temporal signal variation are essential components of system behavior.

Conversely, Figure 7 depicts a flat, unmodulated line on the oscilloscope display, signifying the presence of a constant, time-invariant voltage level. These differences are further summarized in Table 1, which provides a detailed comparison of the waveform characteristics between the unfiltered and filtered rectifier outputs. Despite the Volt/Div setting being adjusted to 10 volts per division, both the measured peak voltage (Vp) and peak-to-peak voltage (Vpp) register at 0 volts. This absence of signal oscillation suggests that the circuit is either maintaining a steady-state direct current (DC) voltage at or near zero or that no input signal is present or detected at the measurement point. This static condition stands in sharp contrast to the active signal behavior observed in Figure 6, emphasizing the fundamental distinction between a dynamic, alternating system and an inactive or stable DC configuration.

The testing procedure is executed after confirming the correct assembly and operational integrity of the complete circuit, ensuring that the system produces a stable and regulated output voltage. This regulated output is essential for supplying power to the DC motor, allowing precise control over its rotational speed. Maintaining voltage stability at this stage is critical to avoid performance degradation, motor instability, or system inefficiencies, thereby ensuring the intended operational performance under both static and dynamic load conditions.

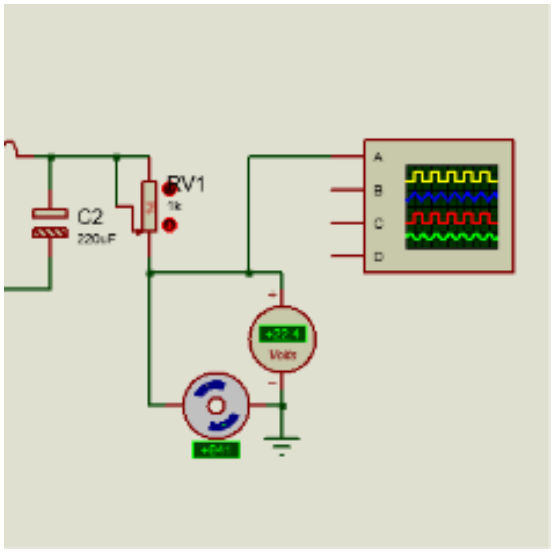

Figure 8. DC motor testing.

During the experimental measurements, as shown in Figure 8, a voltage drop of approximately 1.6 V was recorded across the circuit, a phenomenon primarily attributed to the characteristics of the DC motor load. The DC motor, by design, incorporates inductive elements arising from its internal coil windings, which introduce inductive reactance into the system. In circuits containing inductance, the current response does not instantaneously align with the applied voltage; instead, it exhibits a lagging behavior, resulting from the inductor's inherent opposition to changes in current flow. This effect introduces a phase shift between the load current and the supply voltage, meaning the two waveforms are no longer in phase.

This phase displacement leads to reduced real power transfer efficiency, as part of the supplied power is effectively stored and released by the magnetic field of the motor's inductance rather than being directly converted into useful mechanical work. Consequently, the apparent power drawn by the system increases, while the portion of power effectively delivered as useful output (the real power) is diminished, resulting in a net reduction in the observed output voltage.

In addition to the inductive phase shift, other contributing factors such as the motor's internal

resistance (winding resistance), contact resistance at terminals and connectors, and transient switching effects within the motor's commutator and brushes further compound the voltage drop. These resistive and transient losses dissipate energy as heat and contribute to overall system inefficiencies.

Understanding and minimizing such losses is of critical importance in practical applications, particularly when optimizing the performance of motor-driven systems where precise voltage regulation, high efficiency, and minimal power losses are required. By accounting for these factors, engineers can implement improved circuit designs or compensatory control strategies (e.g., power factor correction, advanced filtering) to enhance system stability, reduce energy waste, and improve the overall operational lifespan of the motor system.

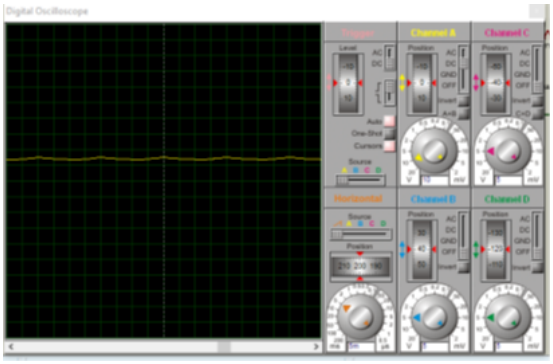

Figure 9. Waveform voltage regulator is loaded with a DC motor.

The oscilloscope display in Figure 9 shows a relatively stable waveform with minimal fluctuations, indicating a steady voltage or current signal. The waveform appears to be a DC signal with slight ripples, suggesting that it could be the output of a rectifier circuit, possibly after minimal filtering. The amplitude remains nearly constant, implying a low level of distortion or noise in the system. The settings on the oscilloscope, such as AC/DC coupling and voltage divisions, are configured to capture small variations in the signal effectively.

5 Conclusion

The experimental results confirm that armature voltage regulation is an effective and straightforward method for precise DC motor speed control. However, operating beyond the motor's rated voltage risks thermal damage, while insufficient voltage can lead to unstable performance due to inadequate current. Notably, under load conditions, a measured voltage drop of approximately 1.6 V was observed, primarily caused by the inductive reactance of the motor windings and resistive losses in the circuit, which directly impact real power transfer and overall system efficiency.

Although simulations provide valuable preliminary insights, they cannot fully capture real-world complexities such as phase shifts introduced by inductive loads, parasitic resistances, and transient switching effects. Therefore, experimental validation with physical motors and circuitry is essential to refine control strategies, quantify system losses, and ensure operational reliability under practical conditions, where nonlinearities and dynamic interactions significantly affect performance.

Combining simulations with empirical testing bridges theoretical models and real-world performance, enabling optimized DC motor control solutions. This integration is increasingly important as industries demand higher precision, efficiency, and durability in motor-driven systems, particularly in emerging applications such as automation, robotics, and electric vehicles, where understanding and mitigating real-world inefficiencies can directly influence energy consumption, system stability, and long-term durability.

Data Availability Statement

Data will be made available on request.

Funding

This work was supported without any funding.

Conflicts of Interest

The authors declare no conflicts of interest.

Ethical Approval and Consent to Participate

Not applicable.

References

[1] Irawan, Y. (2024). Speed control of DC motors using full-wave uncontrolled rectifiers: A comparative analysis. *Journal of Marine Electrical and Electronic Technology*, 2(1), 1-9.

[2] Afriyansah, H. D. (2022, November). Application of single-phase controlled rectifier full-wave as a brushless DC motor speed regulator: An innovative approach for empowering rural communities. In *Conference of Electrical, Marine and Its Application* (Vol. 1, No. 1, pp. 96-106).

[3] Pramudika, A. E. S. (2022, November). Analysis of a three-phase uncontrolled full-wave rectifier under induction motor rotational conditions: A technical investigation. In *Conference of Electrical, Marine and Its Application* (Vol. 1, No. 1, pp. 28-36).

[4] Gamazo-Real, J. C., Vázquez-Sánchez, E., & Gómez-Gil, J. (2010). Position and speed control of brushless DC motors using sensorless techniques and application trends. *sensors, 10*(7), 6901-6947. [CrossRef]

[5] Hou, S., Ni, W., Zhao, K., Cheng, B., Zhao, S., Wan, Z., ... & Chen, S. (2023). Fine-grained online energy management of edge data centers using per-core power gating and dynamic voltage and frequency scaling. *IEEE Transactions on Sustainable Computing, 8*(3), 522-536. [CrossRef]

[6] Bolla, R., Bruschi, R., Davoli, F., & Lombardo, C. (2015). Fine-grained energy-efficient consolidation in SDN networks and devices. *IEEE Transactions on Network and Service Management, 12*(2), 132-145. [CrossRef]

[7] Liu, M., Fu, M., & Ma, C. (2016). Low-harmonic-contents and high-efficiency class E full-wave current-driven rectifier for megahertz wireless power transfer systems. *IEEE Transactions on Power Electronics, 32*(2), 1198-1209. [CrossRef]

[8] Haseeb, A. (2022). *Development of Self-Powered Boost Converter circuits for Enhancing the Efficiency of Piezoelectric Energy-Harvesting Systems* (Doctoral dissertation, Southern Cross University).

[9] Zakai, F. M., Faizan, M., & Khan, M. F. (2021). PCB Design and Fabrication. In *Functional Reverse Engineering of Strategic and Non-Strategic Machine Tools* (pp. 79-95). CRC Press.

[10] Wilmshurst, T. (2006). *Designing embedded systems with PIC microcontrollers: principles and applications*. Elsevier.

[11] Camburn, B., Viswanathan, V., Linsey, J., Anderson, D., Jensen, D., Crawford, R., ... & Wood, K. (2017). Design prototyping methods: state of the art in strategies, techniques, and guidelines. *Design Science, 3*, e13. [CrossRef]

[12] Rahman, F. W. N., As'ad, R. F., & Yuniza, S. I. (2024). Application of ant colony optimization algorithm in determining PID parameters in AC motor control. *Brilliance: Research of Artificial Intelligence, 4*(2), 538-549.

[13] Agna, D. I. Y., Sobhita, R. A., & Nugraha, A. T. (2023). Penyearah gelombang penuh 3 fasa tak terkendali dari generator kapal AC 3 fasa. *Seminar MASTER PPNS, 8*(1).

[14] Robinson, F. V. P. (1997). Power electronics converters, applications and design. *Microelectronics Journal, 28*(1), 105-106.

[15] Ye, W., Ma, Q., & Zhang, P. (2018). Improvement of the torque-speed performance and drive efficiency in an SRM using an optimal torque sharing function. Applied Sciences, 8(5), 720. [CrossRef]

[16] Rashid, M. H. (2010). Power Electronics Handbook: (Butterworth-Heinemann).

[17] Vivek, J. (2023). *Introduction To Electronics And Communication Engineering.* Academic Guru Publishing House.

[18] Agna, D. I. Y., Yuniza, S. I., & Nugraha, A. T. (2022). The single-phase controlled half wave rectifier with single-phase generator circuit model to establish stable DC voltage converter result. *International Journal of Advanced Electrical and Computer Engineering, 3*(3).

[19] Yuniza, S. I., Agna, D. I. Y., & Nugraha, A. T. (2022). The design of effective single-phase bridge full control resistive load rectifying circuit based on MATLAB and PSIM. *International Journal of Advanced Electrical and Computer Engineering, 3*(3).

[20] Zulu, M. L. T. (2021). *Power flow and faults analysis of a hybrid DC Microgrid: PV system and wind energy* (Doctoral dissertation).



Anggara Trisna Nugraha earned a Bachelor's degree in Electrical Engineering from Universitas Jember and a Master's in Electrical Engineering from Institut Teknologi Sepuluh Nopember. He is now a lecturer at Politeknik Perkapalan Negeri Surabaya. (Email: anggaranugraha@ppns.ac.id)

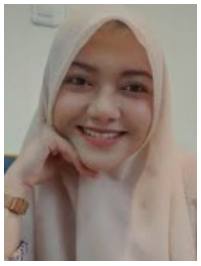

Anisa Fitri Santosa holds a D4 in Automation Engineering from the Surabaya State Polytechnic of Shipping and a Master's from National Chung Hsing University, Taiwan, and currently works as a laboratory assistant. (Email: g112040521@mail.nchu.edu.tw)



Rama Arya Sobhita holds a D4 in Ship Electrical Engineering from the Surabaya State Polytechnic of Shipping and plans to pursue a Master's degree at National Chung Hsing University, Taiwan. (Email: ramasobhita@student.ppns.ac.id)