RESEARCH ARTICLE

Dispersion-Compensating Method for High-Capacity Fiber-Optic Communication System

Md. Moklesur Rahman[1], **Md. Nazmul Alam**[2], **Tarek Mah Faisal**[3] **and Md. Najmul Hossain**[4,*]

[1] IMT Atlantique / Lab-STICC, CNRS, UMR 6285, Technopole Brest 29238, France
[2] Inter-Cloud Limited, Dhaka, Bangladesh
[3] University of California, Davis, CA 95616, United States
[4] Department of Electrical, Electronic and Communication Engineering, Pabna University of Science and Technology, Pabna 6600, Bangladesh

Abstract

Designing a reliable fiber optic communication network is crucial. High-speed optical networks are now a vital part of the communication system and the foundation of wireless and mobile networks, driven by their constant expansion and increasing demand. The high transmission rate improves spectral utilization, increases system capacity, and reduces overall system expenditure. To improve the communication channel and achieve high transmission performance and data rates, a spread-spectrum compensation scheme is required. The goal of fiber optic communication systems is to transmit as many bits per second as possible over the longest possible distance at an acceptable data rate. Two methods are presented, and the DCF diagram is shown in the first and second configurations. The simulation evaluates the communication performance at different speeds or bit rates, including (2.5, 10) Gbps. In the other system, the simulation is performed at various bit rates and cable lengths.

Keywords: fiber optic, high-capacity, SNR, optical dispersion, BER.

Submitted: 29 June 2025
Accepted: 22 December 2025
Published: 13 January 2026

Vol. 2, **No.** 1, 2026.
10.62762/TACS.2025.603512

***Corresponding author:**
Md. Najmul Hossain
najmul_eece@pust.ac.bd

1 Introduction

Information can be sent across huge distances or just a few kilometers (Km) between locations via a communication system [1]. By delivering light pulses over an optical fiber connection, it primarily uses the IM-DD (intensity modulation and direct detection) technique to transfer data and information from one location to another. Furthermore, electromagnetic carrier waves, which have frequencies ranging from a few megahertz to hundreds of terahertz, are used to transmit information [2–5, 7]. For optical communication systems, high carrier frequencies (about 100 THz) are required. Lightwave systems are sometimes used to differentiate them from microwave systems. It is impossible to see the light energy used in fiber-optic transmission. The wavelength of the light employed in this instance is between 400 and 1550 nm [8]. Systems that transport information using

Citation
Rahman, M. M., Alam, M. N., Faisal, T. M., & Hossain, M. N. (2026). Dispersion-Compensating Method for High-Capacity Fiber-Optic Communication System. *ICCK Transactions on Advanced Computing and Systems*, 2(1), 53–60.

© 2026 by the Authors. Published by Institute of Central Computation and Knowledge. This is an open access article under the CC BY license (https://creativecommons.org/licenses/by/4.0/).

lightwaves and optical fibers are known as fiber-optic communication systems [9–11].

Along the length of an optical fiber, digital and analogue transmissions are distorted by the dispersion of a transmitted optical signal. The feature of velocity changing with wavelength causes dispersion. There are three kinds of dispersions: modal dispersion, material dispersion, and chromatic dispersion [12]. As the light pulse travels through the optical channel, it is dispersed by scattering mechanisms within the fiber. This phenomenon, known as the multipath effect in the wireless channel, reduces the data rate and information transfer rate, impairing communication performance due to dispersion [12–14].

Attenuation and scattering may reduce the optical fiber's transmission and communication speeds. By creating fiber amplifiers and optimizing the fiber, attenuation can be accomplished. Dispersion-compensated fiber (DCF), a novel fiber type, is combined with active fibers using a unique technology. A recently popular fiber with a high negative dispersion value is DCF. Dispersion compensation techniques must be used to account for dispersion before an accurate sample can be computed [15–18]. At higher data rates, dispersion, or pulse spreading, becomes stronger because the signal's spectral bandwidth is broadened. In this case, the above steps must be repeated. In the future, telecommunications networks will be made of optical fibers. Optical communication is a relatively new technology, driven by rapid development and a wide range of applications. It is a symbol of the latest technological changes worldwide [19, 20].

2 System Design and Setup

Designing and creating a simulation of the pre-compensation and post-compensation dispersion systems using Optiwave's OptiSystem software is the initial stage. To achieve the optimal Q-factor, the software's model design will be used to adjust factors such as bit rate and link distance. System comparison analysis will be conducted using the same software. The bit error rate (BER) visualizer is also used to analyze the Q-factor, eye diagrams, and BER. This paper utilizes dispersion-compensating fibers (DCFs). We then examine how dispersion compensation affects the system's functionality. The receiver sensitivity in these systems, which use NRZ modulation formats, is -28 dBm for a data rate of 2.5 Gbps. At different fiber distances and data rates, we examine those strategies. In a single frame (Figure 1), the workflow is shown.

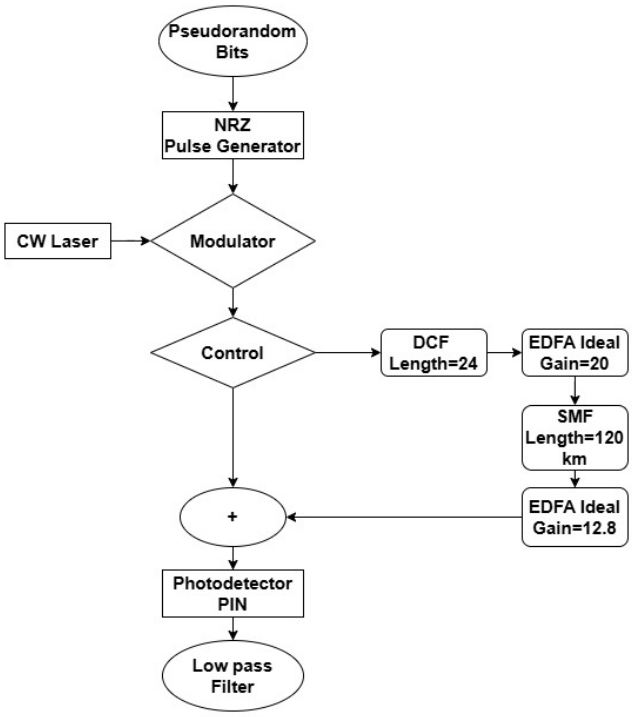

Figure 1. Flow chart of the system design.

Table 1. Fiber parameters.

Parameter	SMF	DCF
Length (km)	80, 100, 120, 140	24
Attenuation (dB/km)	0.6	0.2
Dispersion (ps/nm/km)	16	-80

As shown in Figures 2 and 3, the simulation setup utilizes OptiSystem software to compensate for dispersion at various data rates. The simulations employ the fiber parameters listed in Table 1 and the system settings given in Table 2. A random stream of $0s$ and $1s$ is generated by a pseudo-random bit generator, which constitutes the transmitter portion of the simulation setup. The NRZ pulse source receives the output of the pseudo-random bit generator and transforms it into electrical pulses from binary data. A continuous laser with a center frequency of 193.1 THz is then utilized to modulate the signal from the NRZ pulse generator's output using a match modulator. The bit rate of 10 Gbps was chosen as it represents a standard data transmission rate commonly used in modern high-speed optical communication systems, particularly in short-reach and metro networks. This rate strikes a practical balance between system complexity, power consumption, and cost-efficiency, making it a widely accepted benchmark for evaluating system performance. The optical channel frequency

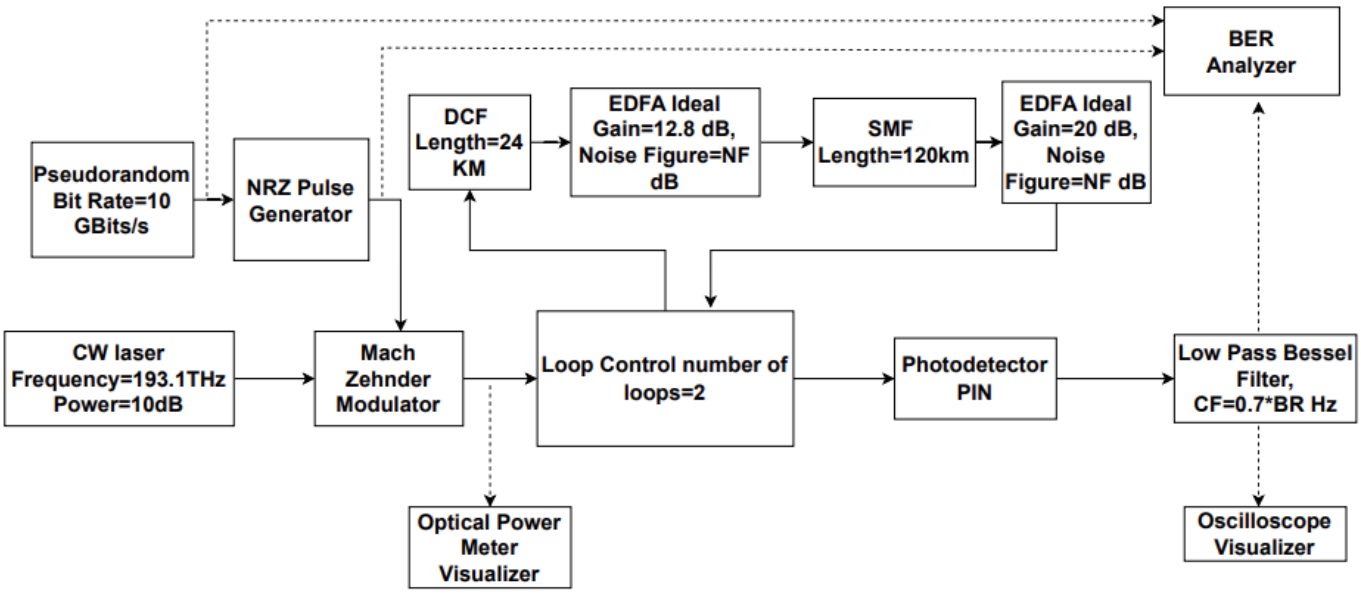

Figure 2. Block diagram of the pre-compensation approach.

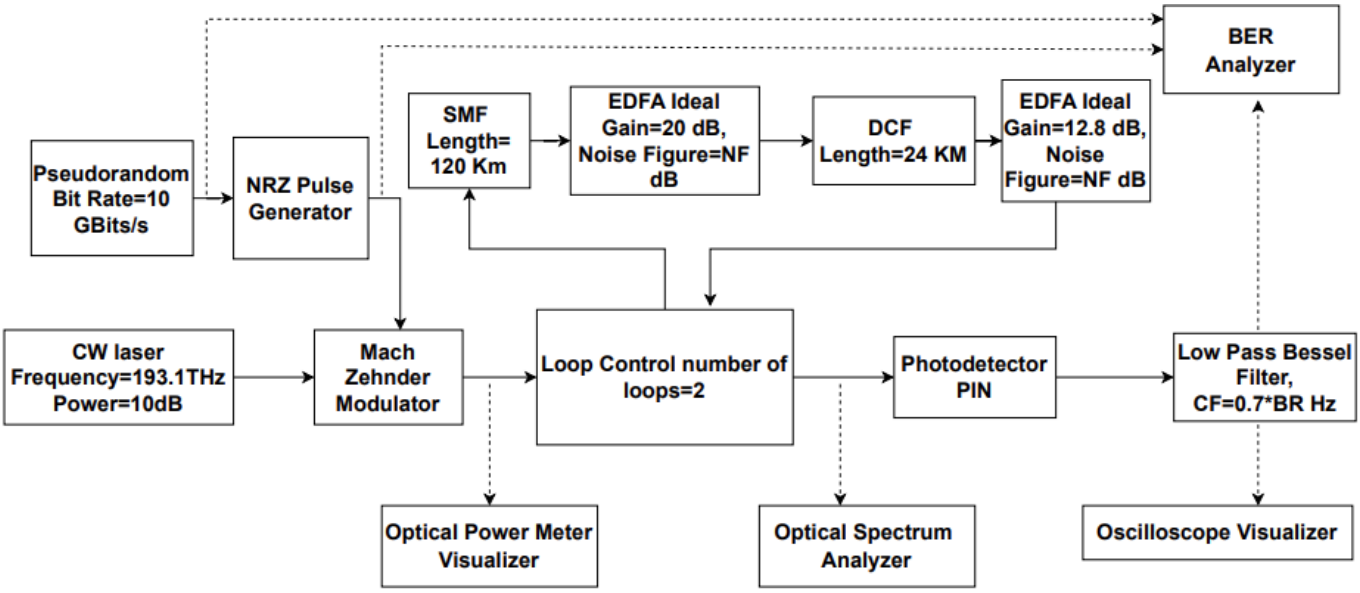

Figure 3. Diagram of the post-dispersion compensation system.

Table 2. Simulation parameters.

Parameter	Value
Bit rate (Gbps)	10
Channel Frequency (THz)	193.1
Amplifier gain (dB)	20
Noise figure (dB)	4
Insertion loss (dB)	0
Cut-off frequency (Hz)	$0.7 \times$ bit rate

of 193.1 THz corresponds to the central frequency of the C-band (around 1550 nm) — the most widely used spectral window in optical fiber communication. This band is preferred due to its low attenuation (~ 0.2 dB/km) and compatibility with erbium-doped fiber amplifiers (EDFAs), which are mature and efficient for long-distance signal amplification. These specific values were selected to ensure that the simulation and analysis remain relevant to realistic, standardized optical communication scenarios, enabling easier comparison with existing systems and future scalability.

The SMF and DCF make up the optical fiber link, which also includes a 20 dB gain erbium-doped fiber amplifier. The key parameters of SMF and DCF are summarized in Table 1. To compensate for the dispersion slope of the transmission fiber, each span consists of 24 km of DCF and 120 km of SMF,

corresponding to the lengths specified in Table 1. The fiber channel stays the same length, which is 144 km. The DCF is used to control the input power level, and two EDFAs (Erbium-Doped Fiber Amplifiers) are placed in front of the transmitting fiber. The PIN photodiode receptor line converts optical signals into electrical signals using a thin-pass Bessel filter to remove noise frequencies.

3 Eye Diagrams after Compensation

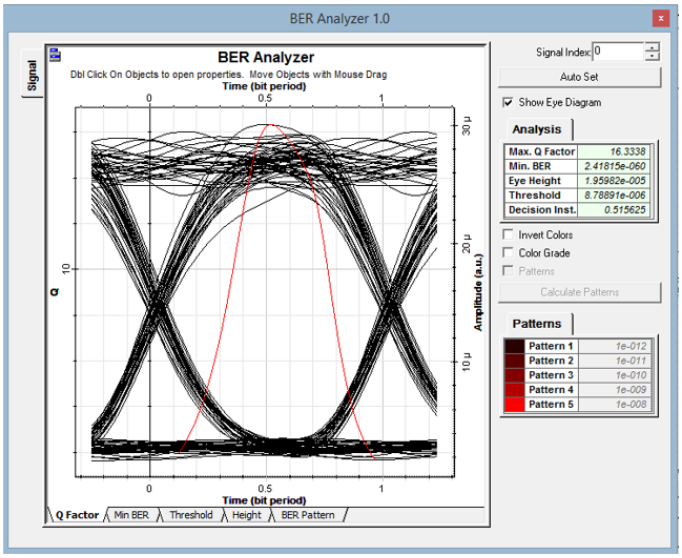

(a) 2.5 Gbps

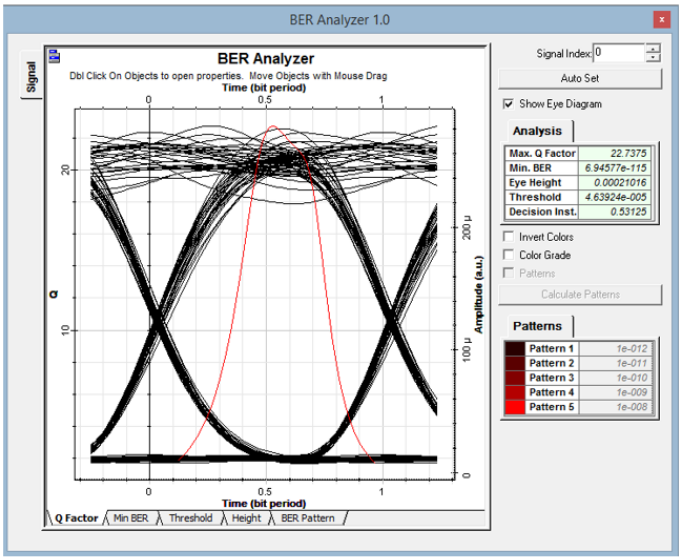

(b) 10 Gbps

Figure 4. Pre-compensation eye diagram from a BER analyzer at (a) 2.5 Gbps, (b) 10 Gbps [6].

The eye diagrams produced at the output end by the BER analyzer are displayed in this section and are depicted in Figures 4 and 5. Eye diagrams of various dispersion compensation systems, including

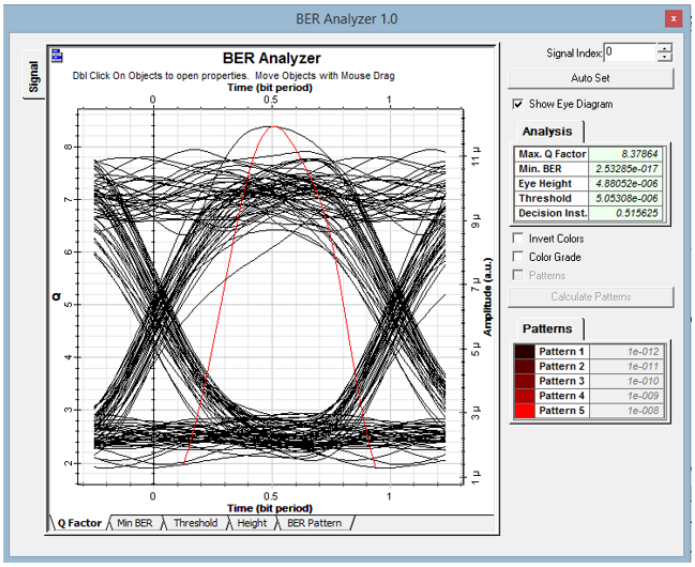

(a) 2.5 Gbps

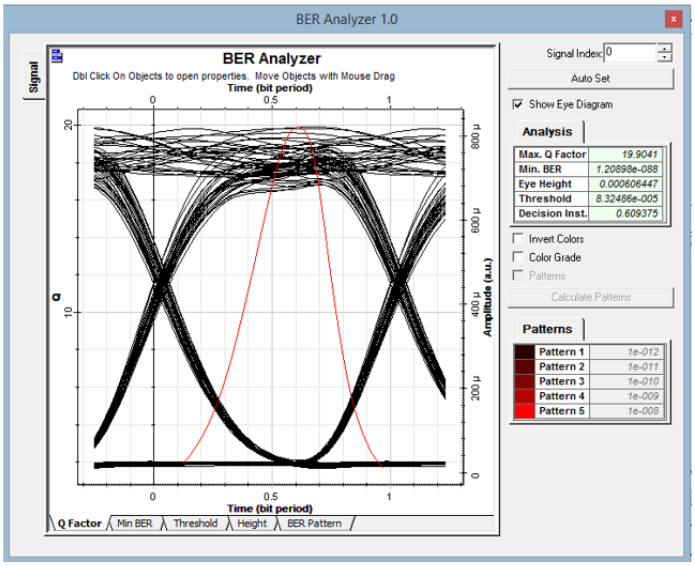

(b) 10 Gbps

Figure 5. Post-compensation eye diagram from a BER analyzer at (a) 2.5 Gbps, (b) 10 Gbps [6].

pre- and post-compensation schemes, are shown in Tables 3 and 4, which present the simulation outcomes. For data rates of (2.5, 10) Gbps, the Q factor of the received signal is plotted against the power of the sent signal in the tables for these two distinct compensation techniques.

The central and most prominent feature in both images is an eye diagram, shown in Figure 4. It superimposes multiple sweeps of a digital signal, allowing visualization of signal quality, noise, and inter-symbol interference (ISI). The x-axis is labeled "Time (bit period)," ranging from 0 to 1, indicating that the signal is normalized to one-bit duration.

Table 3. Before compensation.

Length of fiber (km)	Q-factor	Min-BER
80	3.90516	4.66805×10^{-5}
100	8.27003	6.4279×10^{-17}
120	17.00448	1.2382×10^{-65}
140	7.25918	1.6153×10^{-13}
160	2.51525	0.00587

Table 4. After compensation.

Length of fiber (km)	Q-factor	Min-BER
80	3.72287	9.82137×10^{-5}
100	6.54616	2.8385×10^{-17}
120	19.9041	1.20898×10^{-88}
140	7.60825	2.19894×10^{-16}
160	3.1002	0.000811161

The red curve superimposed on the eye diagram likely represents the sampling window or decision point. The y-axis is labeled "amplitude (a.u.)" with a scale in micro-amperes, suggesting the signal is an electrical representation of an optical signal (e.g., after photodetection).

On the right, there's an "Analysis" pane that provides key performance metrics derived from the eye diagram. Below the "Analysis" pane, there's a "Patterns" pane with a color gradient (red to dark red) and corresponding values (10^{-12} to 10^{-8}), which likely represent different BER patterns or thresholds.

- **Maximum Q factor:** 16.3339 (Pre-compensation, 2.5 Gbps). It is a measure of signal quality related to the signal-to-noise ratio and is directly proportional to the eye opening. A higher Q-factor indicates a better signal.
- **Minimum BER:** 2.41875×10^{-60} (Pre-compensation, 2.5 Gbps) is the minimum bit error rate achievable for this signal, indicating a very low error probability.
- **Eye height:** 1.5985×10^{-5} (Pre-compensation, 2.5 Gbps). This is the vertical opening of the eye diagram at the optimal sampling time, representing the signal amplitude difference between the "1" and "0" levels, free from noise and distortion.
- **Threshold level:** 8.7689×10^{-6} (Pre-compensation, 2.5 Gbps). This is the optimal decision threshold (voltage or amplitude level) used to distinguish between "0" and "1" bits.
- **Decision instant:** 0.515625 (bit period). This is the optimal sampling instant within the bit period, indicating where the eye is most open horizontally.

Notably, the second image Figure 4 (b) represents a significantly better signal quality than the first image in Figure 4 (a). This is evident from the higher maximum Q factor: 22.7375 vs. 16.3339, and extremely low minimum BER: 6.94577×10^{-115} vs. 2.41875×10^{-60}. This is the most striking difference, indicating a massive improvement in error performance.

Similarly, comparing the Figure 5, the signal represented in Figure 5 (b) is of vastly superior quality compared to that of Figure 5 (a). This is strongly supported by the key metrics:

- **Maximum Q factor:** 19.9041 in Figure 5 (b) vs. 8.37864 in Figure 5 (a). The higher Q-factor in the second image indicates a much better signal-to-noise ratio.
- **Minimum BER:** 1.20859×10^{-49} in Figure 5 (b) vs. 2.83956×10^{-17} in Figure 5 (a). The second image shows an effectively error-free performance, which is orders of magnitude better than the first.
- **Eye height:** 6.06447×10^{-4} in Figure 5 (b) vs. 4.86052×10^{-6} in Figure 5 (a). The second image has a significantly larger eye height, meaning a greater voltage swing between '1' and '0' levels, making it less susceptible to noise.

Table 5 summarizes a separate comparison scenario in which the bit rate and launch power are varied while the transmission distance is kept constant..

The study primarily focuses on varying fiber length with a constant bit rate and input power in the first scenario, and then varying input power at different bit rates in the second. While useful, this might not cover all possible real-world operating conditions and interactions between parameters. Also, the paper does not explicitly discuss the limitations of the chosen dispersion compensation techniques (pre- and post-compensation using DCF) themselves, such as their cost, complexity, or scalability for extremely long-haul or ultra-high-speed networks.

Future work could involve a more comprehensive study of multiple parameters simultaneously, such as combining different fiber lengths, bit rates, and input power levels, to identify a more global optimal

Table 5. Comparative findings from many compensation.

Bit rate (Gbps)	Parameter	Pre-compensation	Post-compensation	Power (dBm)
2.5	Q-factor Min-BER	16.3338 2.41875×10^{-60}	8.37864 2.83956×10^{-17}	-10 dBm
10	Q-factor Min-BER	22.7375 6.94577×10^{-115}	19.9041 1.20859×10^{-49}	+10 dBm

operating point or to understand complex interactions among these parameters. Moreover, investigating and comparing other dispersion compensation techniques, such as Fiber Bragg Gratings (FBGs), electronic dispersion compensation (EDC), or digital signal processing (DSP) based methods, could provide a more complete picture and identify more robust or cost-effective solutions for different scenarios. Finally, the paper briefly mentions machine-learning-aided systems in the references. Future work could explore applying machine learning techniques for dynamic dispersion compensation or for real-time optimization of system parameters based on changing channel conditions.

4 Conclusion

In this study, the simulation results of the systems before and after compensation are shown and discussed. Numerous parameters are altered in the system performance study to compare and assess the performance both pre- and post-dispersion. Investigations are also conducted to determine how performance affects the dispersion compensation systems. The technology was first examined by adjusting the fiber length while maintaining a constant 10 Gbps bit rate at 10 dBm input power. We varied the input power in the second scenario to evaluate the optical system at (5, 10) Gbps. In the variable bit-rate scenario (Table 5), the 10 Gbps configuration achieves the highest Q-factor and lowest BER, whereas the 2.5 Gbps configuration operates at significantly lower launch power, indicating a performance-efficiency trade-off rather than absolute performance superiority. Furthermore, the chosen operating conditions, such as a bit rate of 10 Gbps, and a central channel frequency of 193.1 THz, align with real-world standards for C-band optical transmission, reinforcing the practical relevance of this work.

Data Availability Statement

Data will be made available on request.

Funding

This work was supported without any funding.

Conflicts of Interest

Md. Nazmul Alam is affiliated with the Inter-Cloud Limited, Dhaka, Bangladesh. The authors declare that this affiliation had no influence on the study design, data collection, analysis, interpretation, or the decision to publish, and that no other competing interests exist.

Ethical Approval and Consent to Participate

Not applicable.

References

[1] Kazaura, K., Wakamori, K., Matsumoto, M., Higashino, T., Tsukamoto, K., & Komaki, S. (2010). RoFSO: a universal platform for convergence of fiber and free-space optical communication networks. *IEEE Communications Magazine, 48*(2), 130-137. [CrossRef]

[2] Xia, P., Zhang, L. H., & Lin, Y. (2019, April). Simulation study of dispersion compensation in optical communication systems based on optisystem. In *Journal of Physics: Conference Series* (Vol. 1187, No. 4, p. 042011). IOP Publishing. [CrossRef]

[3] Agrawal, G. P. (2012). *Fiber-optic communication systems*. John Wiley & Sons. [CrossRef]

[4] Alam, S. J., Alam, M. R., Hu, G., & Mehrab, M. Z. (2011). Bit error rate optimization in fiber optic communications. *International Journal of Machine Learning and Computing, 1*(5), 435.

[5] Keiser, G. (2021). *Optical fiber communications* (6th ed.). McGraw-Hill.

[6] Rahman, M. M., Islam, M. S., Tanvir, M. M., Rubayan, S., & Pabna, B. (2019). Study and design of A high capacity fiber-optic communication link by analyzing and comparing different dispersion techniques using DCF. *Asian Journal of Technology & Management Research, 9*(2).

[7] Ramaswami, R., & Sivarajan, K. (2001). *Optical networks: a practical perspective*. Elsevier.

[8] Shaalan, I. E., Selmy, M. I., Aly, M. H., &

Abdallah, R. M. (2025). Optical fiber dispersion compensation: supervised machine learning with regression approach. *Optical and Quantum Electronics, 57*(5), 303. [CrossRef]

[9] Kazovsky, L. G. (1997). Advanced Optical Fiber Communication Systems. Retrieved from https://apps.dtic.mil/sti/html/tr/ADA255424/

[10] Prabu, R. T., Pandian, M. M., Prabu, A. S., Kumar, A. K., Battula, R. S. S. R., Subha, T. D., & Adel, M. H. (2025). Fiber optic system dispersion compensation management within optical fiber communication channels through the control of all hybrid optical amplifiers: simulative study. *Journal of Optical Communications*. [CrossRef]

[11] Essiambre, R. J., Kramer, G., Winzer, P. J., Foschini, G. J., & Goebel, B. (2010). Capacity limits of optical fiber networks. *Journal of Lightwave technology, 28*(4), 662-701. [CrossRef]

[12] Gopalan, A., Arulmozhi, A. K., Pandian, M. M., Mohanadoss, P., Dorairajan, N., Balaji, M., & Taher, A. M. (2024). Performance parameters estimation of high speed Silicon/Germanium/InGaAsP avalanche photodiodes wide bandwidth capability in ultra high speed optical communication system. *Journal of Optical Communications*, (0). [CrossRef]

[13] Winzer, P. J., & Essiambre, R. J. (2006). Advanced modulation formats for high-capacity optical transport networks. *Journal of Lightwave Technology, 24*(12), 4711-4728. [CrossRef]

[14] Allam, M. A., Ali, T. A., & Rafat, N. H. (2024). Broadband dispersion compensation and high birefringence photonic crystal fiber for CWDM/DWDM networks. *Optical and Quantum Electronics, 56*(6), 1023. [CrossRef]

[15] Ogudo, K. A., Mthethwa, M. H., & Nestor, D. M. J. (2019, August). Comparative Analysis of Fibre Optic and Copper Cables for High-Speed Communication: South African Context. In *2019 International Conference on Advances in Big Data, Computing and Data Communication Systems* (*icABCD*) (pp. 1-8). IEEE. [CrossRef]

[16] Shtaif, M., Antonelli, C., Mecozzi, A., & Chen, X. (2022). Challenges in estimating the information capacity of the fiber-optic channel. *Proceedings of the IEEE, 110*(11), 1655–1678. [CrossRef]

[17] Sadeghi, R., Correia, B., Virgillito, E., Napoli, A., Costa, N., Pedro, J., & Curri, V. (2021, June). Comparison of transceiver and C+ L band upgrades: network traffic and energy assessment. In *2021 International Conference on Electrical, Communication, and Computer Engineering* (*ICECCE*) (pp. 1-6). IEEE. [CrossRef]

[18] Pan, X., Wang, X., Tian, B., Wang, C., Zhang, H., & Guizani, M. (2021). Machine-learning-aided optical fiber communication system. *IEEE Network, 35*(4), 136-142. [CrossRef]

[19] Patri, S. K., Autenrieth, A., Elbers, J. P., & Mas-Machuca, C. (2022). Multi-band transparent optical network planning strategies for 6G-ready European networks. *Optical Fiber Technology, 74*, 103118. [CrossRef]

[20] Cheng, J., Xie, C., Chen, Y., Chen, X., Tang, M., & Fu, S. (2019, March). Comparison of coherent and IMDD transceivers for intra datacenter optical interconnects. In *2019 Optical Fiber Communications Conference and Exhibition* (*OFC*) (pp. 1-3). IEEE. [CrossRef]

Md. Moklesur Rahman received the B.Sc. degree in Electronic and Telecommunication Engineering (ETE) from Pabna University of Science and Technology (PUST), Bangladesh, in December 2018. After working at several Academic and IT companies in Dhaka, Bangladesh, he pursued the M.S. degree in the Department of Electronic Engineering at Chungbuk National University (CBNU), Cheongju, South Korea, in August 2024. He recently served as a Radio Frequency (RF) engineer at Korea Radio Laboratory (KRL) Co., Ltd., Seongnam, South Korea. Now, he is pursuing his PhD at the top-tier French research institute, IMT Atlantique, in France. His current research focuses on the technological prerequisites for 6G applications, and he has analyzed key systems for possible use at the PHY layer, including OFDM, OCDM, and AFDM. Additionally, he enjoys conducting research on antennas, authentication security systems for next-generation wireless communication, V2X, mIoT, and ambient backscatter communication systems. In addition to reviewing papers for numerous conferences and journals, including those published by IEEE, Elsevier, and Wiley, he was also a TCP member of multiple international conferences. (Email: md-moklesur.rahman@imt-atlantique.fr)

Md. Nazmul Alam (Senior System Engineer, Cloud Infrastructure) was born in Kushtia, Bangladesh in 1993. He received his B.Sc. degree in Electronic and Telecommunication Engineering (now known as Electrical, Electronic, and Communication Engineering) from Pabna University of Science and Technology, Pabna, Bangladesh, in 2017. He is currently a senior system engineer in the Department of Cloud Infrastructure at Intercloud Limited in Dhaka, Bangladesh. In 2014, he achieved recognition for his excellent performance in the '6th National Undergraduate Mathematics Olympiad 2014' Rajshahi Region at Begum Rokeya University, Rangpur, Bangladesh. He is also a former adjunct faculty member at Dhaka International University, Department of Civil Engineering. He had also worked as a 'system engineer' on the IP Telephony Service Provider (IPTSP) team at Intercloud Limited in Dhaka, Bangladesh. His current research interests include cloud computing, cybersecurity, VoIP networks, and future-generation wireless communication networks. (Email: nalam0539@gmail.com)

Tarek Mah Faisal (CCNA, Senior Network Engineer) was born in Rajshahi, Bangladesh. He received the B.Sc. degree in Electronic and Telecommunication Engineering from Pabna University of Science and Technology (PUST), Pabna, Bangladesh, in 2016, and the M.Sc. degree in Computer Science from Jahangirnagar University, Dhaka, Bangladesh, in 2018. He has currently started his second Master's at the ECE, University of California, Davis, California, USA. He has over eight years of professional experience in IT and network infrastructure, including significant roles at Link3 Technologies Ltd and Trust Bank Limited in Bangladesh. His career includes responsibilities in data center operations, IT support, enterprise network management, system administration, and mobile telecommunication infrastructure. At Link3 Technologies, he played a leading role in two successful projects: a data center relocation and a comprehensive network infrastructure upgrade. Mr. Faisal holds a Cisco Certified Network Associate (CCNA) certification. His research interests include network security, cloud infrastructure, system automation, and emerging technologies in enterprise networking. During his academic years, he authored articles on fractal microstrip antennas and vehicle speed control and security systems, both published in AJER and in IEEE conference proceedings. He was honored with the Prime Minister Gold Medal in 2016 for his academic excellence and received multiple awards, including the PUST Dean Award and a University Merit Scholarship. In addition to his technical work, he maintains an active interest in collaborative research and IT service optimization. (Email: ete.faisal@gmail.com)

Md. Najmul Hossain was born in Rajshahi, Bangladesh, in 1984. He received the B.Sc. and M.Sc. degrees in Applied Physics and Electronic Engineering (currently named Electrical and Electronic Engineering) from the University of Rajshahi, Rajshahi, in 2007 and 2008, respectively, and the Ph.D. degree in advanced wireless communication systems from the Graduate School of Science and Engineering, Saitama University, Saitama, Japan, in 2020. He is currently working as a Professor in the Department of Electrical, Electronic, and Communication Engineering at Pabna University of Science and Technology, Pabna, Bangladesh. His current research interests include computer vision, antenna and wave propagation, advanced wireless communications, and corresponding signal processing, especially for OFDM, OTFS, OCDM, MIMO, and future-generation wireless communication networks. In 2010, he was awarded a Gold Medal for his excellent academic performance. He is also a member of the IEEE Communications Society (ComSoc) and the IEEE Antennas and Propagation Society (AP-S). He is collaboratively conducting research with several renowned professors, such as Prof. Shimamura, Saitama University, Japan; Prof. Shin, University of Aizu, Japan; Prof. Heung-Gyoon Ryu, Chungbuk National University, South Korea; Prof. Raad, University of Wollongong, Wollongong, Australia; and Prof. Nisar, Prince Sattam bin Abdulaziz University, Saudi Arabia. He has served as a Reviewer of several SCI/SCIE/Scopus journals and international conferences. In addition, he served as an Editor for the Journal of Engineering Advancements. (Email: najmul_eece@pust.ac.bd)